Heckmann Building Products Inc.

1501 N. 31st Avenue
Melrose Park, IL 60160-2911
800-621-4140 or 708-865-2403 Fax: 708-865-2640
www.heckmannanchors.com

SUBMITTAL SHEET:
#398 Rubble Stone Anchoring System

- For attaching Rubble Stone to backups of wood, steel studs, CMU and concrete.
- Eliminates Pre-Loading of ties onto vertical rods.
- Twist-On wire ties are 3/16" diameter in Hotdip or Stainless Steel. Specify Length of tie. (Patent Pending)

#398-C L-Type Rubble Clips: 12 gage x 2-3/4" wide x length required. Attach to backup. Slotted bend extends beyond sheathing into airspace for placement of J-Rod.

#398-J J-Hook Rod: 52" long available in 5/16" or 3/8" diameters. Rod goes through rubble clips for wire ties.

#398 Rubble Stone Twist-On Wire Tie: 3/16" diameter in Hotdip or Stainless. Specify length of tie. Twist-On feature provides easy installation. Eliminates pre-loading of ties onto vertical rod.

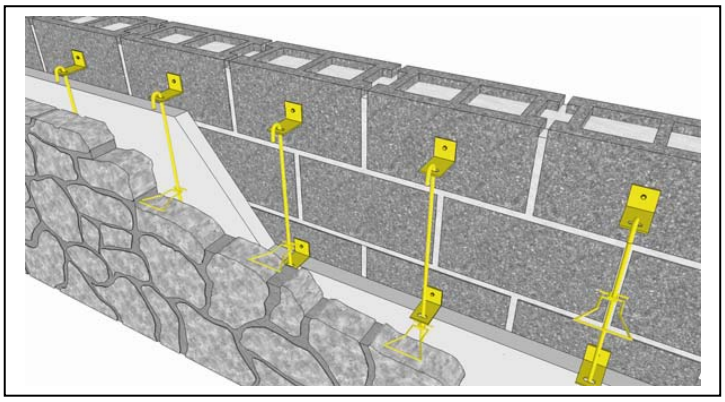

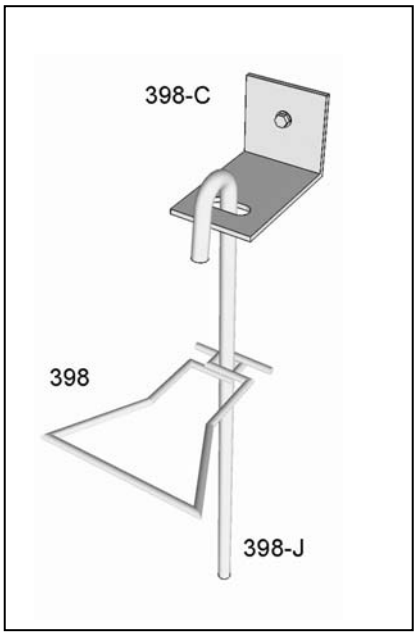

Stainless Steel:
Sheet metal anchors and ties: ASTM A 167 AISI Type 304.
Plate and bent bar anchors: ASTM A 666 AISI Type 304.
Wire ties and anchors: ASTM A 580 AISI Type 304.
Hotdip Galvanized:
ASTM A 153 Class B-2: (1.50 oz/ ft^2.)(0.46kg/m^2)
Plain Steel:
Sheet Metal anchors and ties: ASTM A 569, ASTM A 366.
Plates, bars, and shapes: ASTM A 123, ASTM A 36.
Wire: ASTM A 82, ASTM A 82-95a.

Approvals:

Comments: